Distributed Deployment of Mobile IPv6

IETF80

Dapeng Liu

Brief Report of DMM Design Team Meeting

- Wednesday evening, 16 people join the discussion
- Viewpoints
  - DMM maybe a good chance to help mobile IP been deployed
    - Traffic offload/CDN/Cache in mobile network
  - MEXT DMM drafts
    - Distributed Deployment of Mobile IPv6
      - draft-liu-distributed-mobile-ip-00
    - Approaches to Distributed mobility management using Mobile IPv6 and its extensions
      - draft-patil-mext-dmm-approaches-00
    - A IPv6 Distributed Client Mobility Management approach using existing mechanisms
      - draft-bernardos-mext-dmm-cmip-00
  - Other ideas that not in MEXT charter
    - Signaling/data separation of mobile IP
    - Distributed anchor
    - Routing optimization

Distributed Deployment of Mobile IPv6
Distributed Deployment of Mobile IPv6
draft-liu-distributed-mobile-ip-00

Scenario

```
        +----+
   ,-'' |CN  |.           +----------+
  ,'    +----+  \---------| central  |
 /    Packet      \        |  anchor  |
 |    Data        |        +----------+
 \    Network    ,'             |
  `.            _,              |
    `-..____,,'          *****************
                        *   IP network     *          __....._
                       *                    *       ,'        `-.
     +---------+   +----+             +----+     /  Internet   \
     |  Local  |__ |L-GW|             |L-GW|--- |    Access    |
     | Content |   +----+             +----+     \             ,'
     | Delivery|      *                  *         `-._     _,'
     | Network |       ******************              `'''
     +---------+        ||             ||
                       +----+        +----+
                       |AR1 |        |AR2 |
                       +----+        +----+
                        |  |            |
                        |  |            |
                       MN1 MN2          MN3
```

- Traffic offloading
- Content distribution

→

- Distributed Deployment of Mobility Anchor

One Possible Approach – Dynamic anchoring

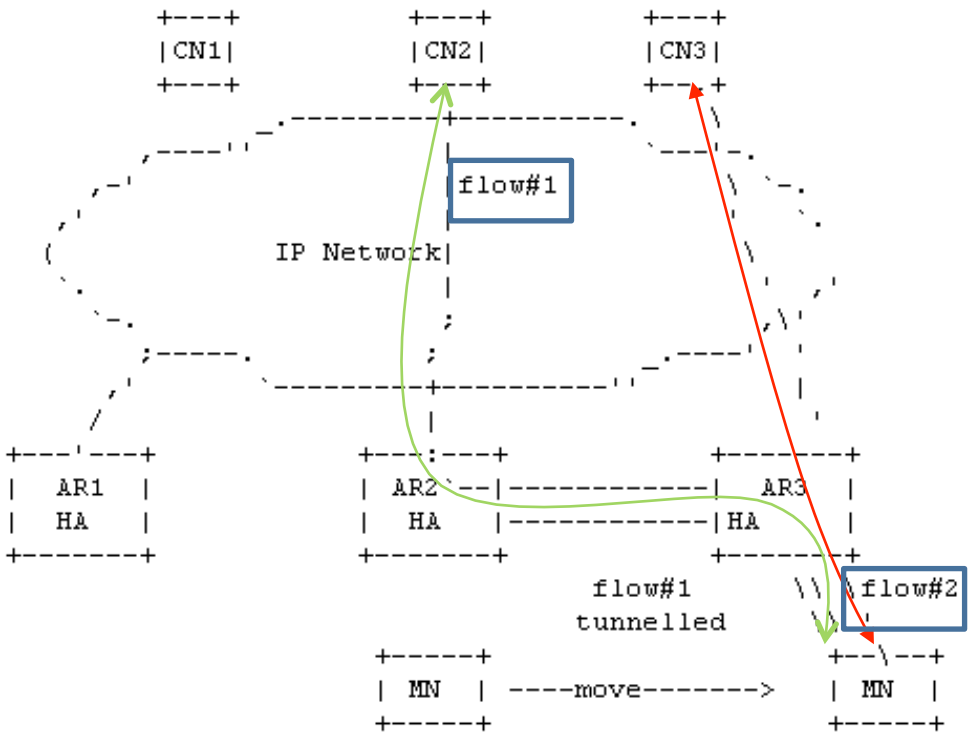

- Implement the HA functionalities in the access routers/L-GW.
- Flow#1 will be routed in a standard way as long as the MN remain attached to AR2.
- If MN moves to AR3, flow#1 remains anchored to AR2, which plays the role of HA.
- If MN starts a new IP communication, flow#2, while attached to AR3, flow#2 will be routed in a standard way as long as the MN remains attached to AR3.

- Implement the HA functionalities in the access routers/L-GW.
- Flow#1 will be routed in a standard way as long as the MN remain attached to AR2.
- If MN moves to AR3, flow#1 remains anchored to AR2, which plays the role of HA.
- If MN starts a new IP communication, flow#2, while attached to AR3, flow#2 will be routed in a standard way as long as the MN remains attached to AR3.

Open Issues

- 1. multiple home address selection
  - 1. multiple home address selection
    - The applications on the mobile node need to select the right home address to maintain the session continuity
    - How many home addresses the MN should have?
  - How many home addresses the MN should have?
  - 2. HA selection
    - The MN has multiple HA configured, need to know which one to send the BU
- 3. CN initiate communication
  - 3. CN initiate communication
    - MN may have several Home Address, which one CN
    - MN may have several Home Address, which one CN

Next Step

comparation different approaches

- Q&A?