MIP6-bootstrapping via DHCPv6 for the Integrated Scenario

(draft-ietf-mip6-bootstrapping-integrated-dhc-00.txt)

mip6-boot-sol Design Team

Kuntal Chowdhury, Editor

MIP6 Boost-Sol Design Team

- Gerardo Giaretta gerardo.giaretta@tilab.com
- Basavaraj Patil basavaraj.patil@nokia.com
- Alpesh Patel alpesh@cisco.com
- Jari Arkko jari.arkko@kolumbus.fi
- James Kempf kempf@docomolabs-usa.com
- Gopal Dommety gdommety@cisco.com
- Alper Yegin alper.yegin@samsung.com
- Junghoon Jee jhjee@etri.re.kr
- Vijay Devarapalli vijayd@iprg.nokia.com
- Kuntal Chowdhury kchowdhury@starentnetworks.com
- Julien Bournelle julien.bournelle@int-evry.fr
- Hannes Tschofenig hannes.tschofenig@siemens.com

Scope of the DT

- To provide solutions for the scenarios in the MIP6 bootstrap problem statement draft: draft-ietf-mip6-bootstrap-ps
- The MN requires
  - HA address
  - Home Address
  - IPsec security association with its Home Agent
- Two scenarios are described in the PS:
  - Split Scenario → draft-ietf-mip6-bootstrapping-split-01
  - Integrated Scenario → draft-ietf-mip6-bootstrapping-integrated-dhc-00.txt [DHCP based solution]

Integrated Scenario

- The Access Service Authorizer (ASA) is the same as Mobility Service Authorizer (MSA)
- The protocol exchange during the network access service authentication and authorization can be leveraged to bootstrap MIP6

Design Goals & Assumptions

- Goals:
  - Define a method for the deployments that use DHCPv6 for configuration management
  - Try to reuse components from MIP6-boot-split solution
  - The solution should be agnostic to the AAA protocol in use i.e. should work with both RADIUS and Diameter
  - The solution should not impose any new requirements on the link between the MN and the NAS
  - The solution should coexist with MIP6-boot-split solution
- Assumptions:
  - DHCP-relay agent is collocated with the NAS (AAA-Client)

Network Diagram of the Solution

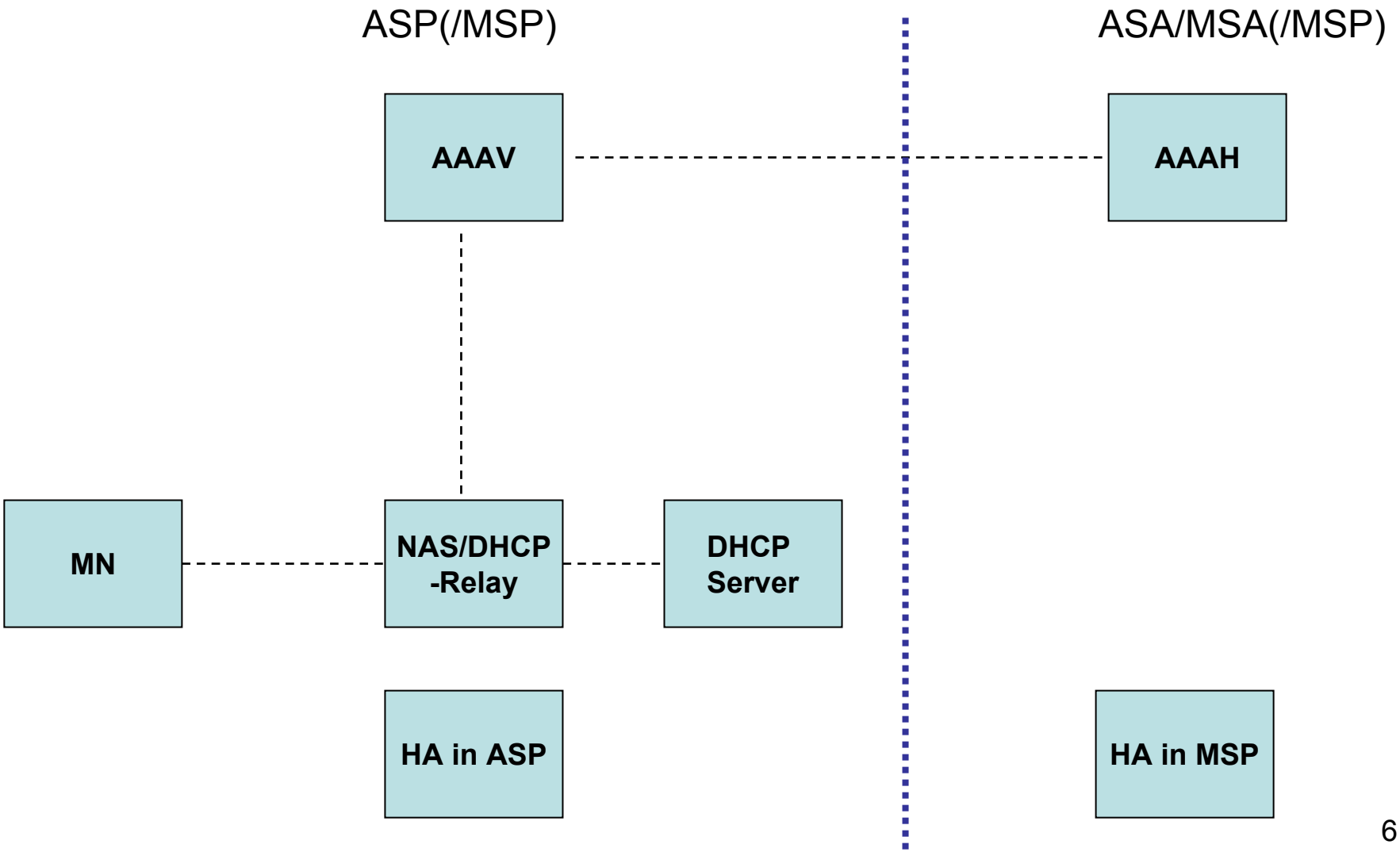

Call Flow

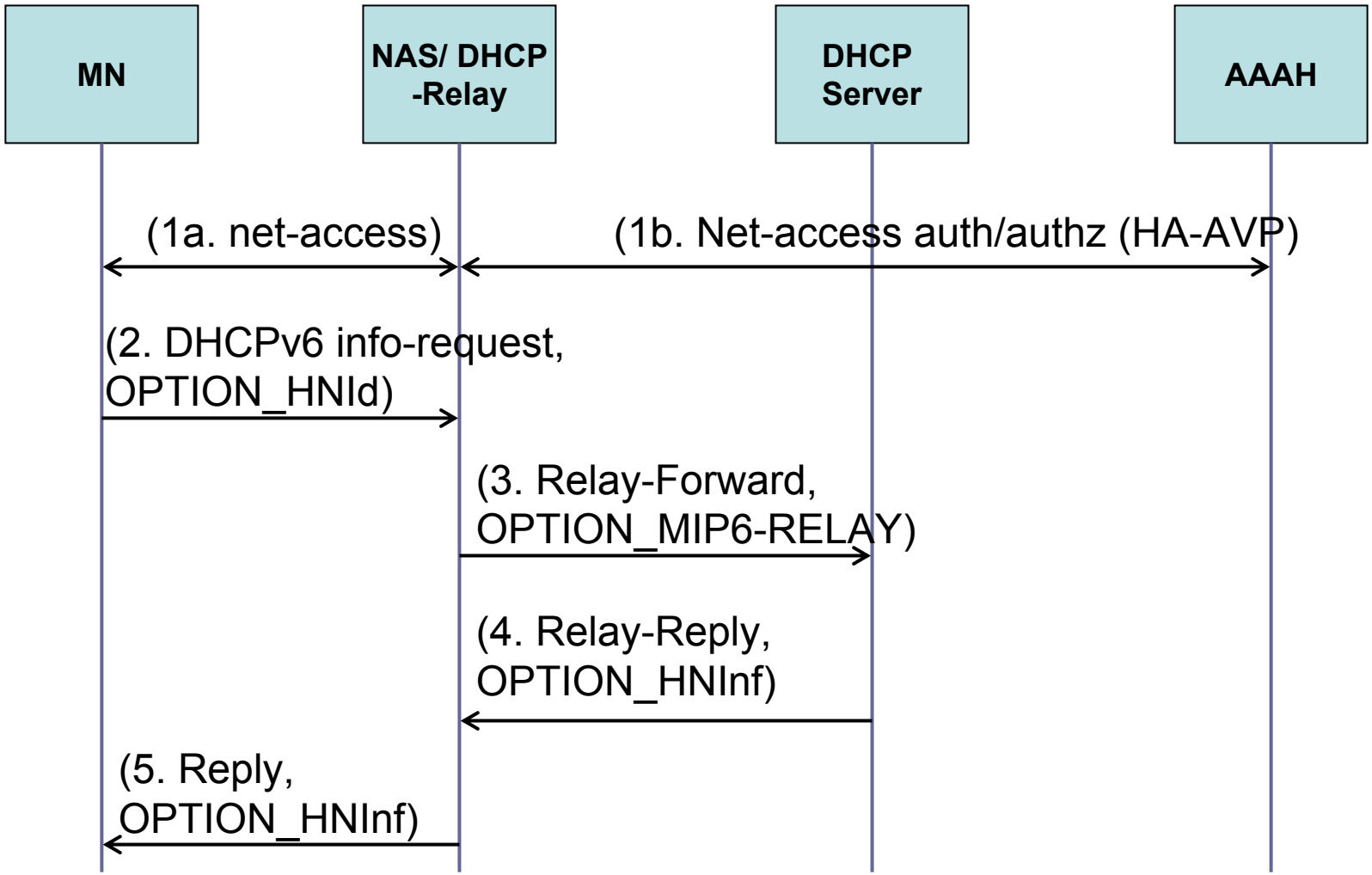
MN
NAS/ DHCP -Relay
DHCP Server
AAAH
(1a. net-access)
(1b. Net-access auth/authz (HA-AVP)
(2. DHCPv6 info-request, OPTION_HNId)
(3. Relay-Forward, OPTION_MIP6-RELAY)
(4. Relay-Reply, OPTION_HNInf)
(5. Reply, OPTION_HNInf)

The Required DHCP Options

- Home Network Identifier Option
  - Used by the MN to convey its preference for home or visited network based bootstrap info (only HA in this case)
- Home Network Information Option
  - Used by the DHCP server to send the mip6 bootstrap info (only HA in this case) to the MN
- DHC Relay Agent Option to carry Mobile IPv6 parameters
  - The Relay Agent uses this to send the received mip6 bootstrap info from the AAAH to the DHCP server

RADIUS and Diameter support

- AAA infrastructure can be either RADIUS or Diameter based
- At the time of access auth, the AAAH may determine that the MN needs mip6 bootstrap info based on the user's AAA profile
- The AAAH sends the MIP6 bootstrap info (HA) via an AAA AVP to the NAS
- AAA dependencies:
  - RADIUS: draft-chowdhury-mip6-radius-00.txt
  - Diameter: NASREQ/EAP with new AVPs [I-D: TBD]

HA Bootstrapping Scenarios

Home Network Info Option	**MN action**
Home Prefix, HA address, HA-FQDN	Use HA address
Home Prefix, HA address	Use HA address
HA address	Use HA address
HA-FQDN, HA address	Use HA address
HA-FQDN	DNS query with HA-FQDN
No information from DHCP	Use DNS based HA discovery as defined in mip6-boot-split solution (if implemented)

Open Issue:1

- DHCP Security Issue: Francis
  - The concern is that the security considerations in the draft is inadequate
  - DHCPv6 based mechanism does not cover the case where the information is being retrieved from a remote network element (e.g. AAAH)
- DT response:
  - Access network specific link layer security should suffice. No new security mechanism for DHCPv6 is necessary.
  - This is inline with the conclusion drawn during IETF-62 ICOS BOF regarding DHCP security. Ref notes: http://www3.ietf.org/proceedings/05mar/icos.html

Open Issue: 2

- Use of AAA for HoA assignment: Francis
  - The draft only defines HA bootstrapping via AAA and DHCPv6
  - The HoA can also be bootstrapped via the AAA and DHCPv6
- DT response:
  - HoA should be assigned by an entity on the home link e.g. the home agent
  - HoA allocation by the AAA is likely to be a static HoA allocation (Statically provisioned HoA in the AAA profile). This defeats the purpose of bootstrapping the HoA
  - HoA allocation by the AAA is not widely used in the large scale mobile IP deployments

Open Issue: 3

- Use of OPTION_MIP6-RELAY-Option vs RRAO: Francis
  - DHCPv6 Relay agent RADIUS Attribute Option (RRAO) should be used instead
- DT response:
  - The defined option works for both RADIUS and Diameter. Whereas RRAO is limited to only RADIUS
  - RRAO does not contain MIP6 information (HA address). Hence it cannot be used in this solution
  - In this draft, AAA AVP parsing is done at the right place i.e. at the NAS unlike RRAO

Open Issue: 4

- Should we fold the DHCP options that are defined in draft-jang-dhc-haopt-01.txt into this I-D?
- Argument for:
  - draft-jang-dhc-haopt does not make sense as a standalone solution
- Argument against:
  - draft-jang-dhc-haopt can be deployed w/o any backend AAA process
  - An example is: A limited scale deployment in an enterprise network

- Q&A
- Thank you